STATIC AUTO TIE MEAN TIME BETWEEN FAILURE CALCULATIONS

Introduction

In a dual power path UPS and distribution system where there are single power cord loads (SPCL) as well as dual power cord loads (DPCL) the availability of protected power to the SPCLs can be greatly increased by the addition of a Powerware® Static Auto Tie (SAT) to the system which will allow the elimination of all the downstream static transfer switches (STS) that serve the SPCLs.

Examples

The individual Powerware 9315 module configured for parallel application has a mean time between failure (MTBF) of 43,800 Hrs. If three of these modules are used in a parallel **redundant** configuration, such as shown in Figure 1.0A, and the MTBF of the parallel combination is calculated per the methods recommended in Mil-Std-HDBK-217, the resultant MTBF is about 6 x 10^7 hours (5.9952 x 10^7) at the terminals of the UPS.

Figure 1.0

A.

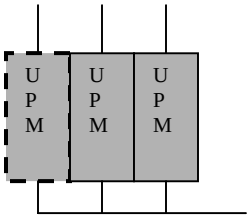

B.

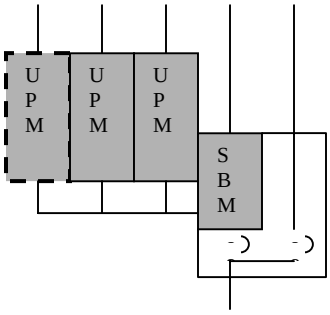

When a system bypass module (SBM) is added to the configuration Figure 1.0B providing automatic transfer and a parallel path for power to the load, the UPS terminal MTBF goes up to about 1 x 10^{12} Hrs (0.8206 x 10^{12}).

This discussion concerns the case where there are both DPCL and SPCL requirements so the parallel configuration just discussed must be duplicated and then attached to a dual path distribution system. The system now looks like Figure 2.0 below.

Figure 2.0

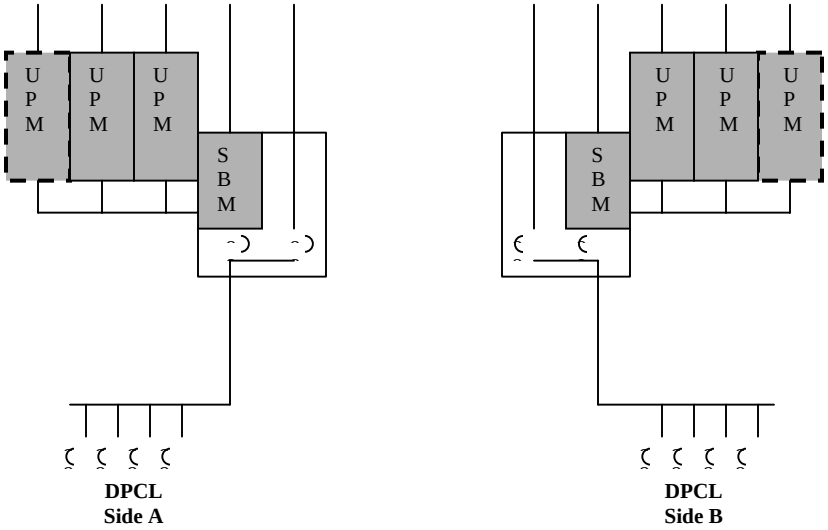

Further application of the calculations from Mil-Std-HDBK-217 show the system in Figure 2.0 to have a mission MTBF of 4.2085 x 10^{22} for the DPCLs supported by the system. The SPCLs must be added to the system.

The SPCLs would typically be addressed by adding dual input STSs to the system. Each input would be attached to either bus "A" or bus "B" of the dual path distribution system in Figure 2.0 and the output of each STS would feed one or more SPCL. See Figure 3.0.

Figure 3.0

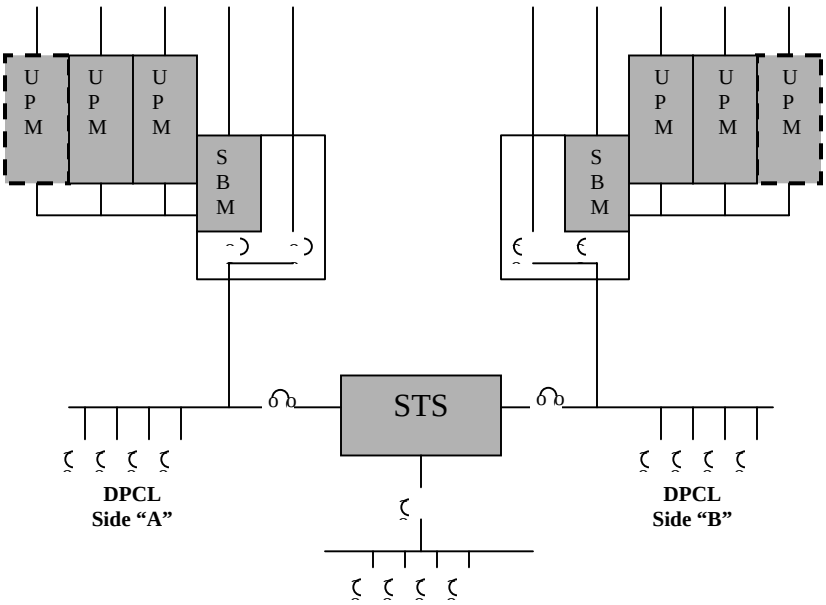

Power through the STS is controlled by continuously conducting static switches (SS); one at each STS input port. The STS control logic will be told to select either input A or input B as the primary source. The system will switch to the other source if problems arise at the primary source. To conduct continuously, a three-phase SS must fire all six of its SCRs in the proper sequence during each cycle. A gate firing logic circuit sets up the firing signals and sequence. Redundant logic power supplies power to the gate firing logic circuit. The output of the two SS connects to a common output bus for distribution to the load.

If a common circuit in the STS, such as the common logic power bus on the output of the redundant logic power supplies fails, both SS in the STS will stop conducting and there will be no output. Even when all is well with the STS, it is feeding a single bus distribution system to the load so the SPCL can never expect the availability of protected power to exceed 99.99% (consider annual maintenance) or about 80,000 (79,992) Hrs. MTBF.

Adding a Powerware SAT to the system can eliminate the need for STS to serve the SPCL and significantly raise the availability of protected power at the SPCL loads. A STS is designed to switch a load from a failed power distribution bus (A) to a second standby distribution bus (B) so that the function of the load is not disrupted or discontinued. A SAT is designed to switch the **entire distribution bus** from one UPS (A) to a second UPS (B) without shutting down the distribution bus or disrupting or discontinuing any load on the bus. One of the two SSs in the STS must be conducting at all times regardless of the status of the STS. The SS in the SAT NEVER conducts except at the moment of transfer increasing the efficiency and the reliability of the system.

Figure 4.0 depicts how the system is configured with the SAT. Note that the STSs have been removed since neither bus A nor bus B will be shut down in this configuration. The MTBF/availability of protected power to the DPCL is little affected by the change

FIGURE 4.0

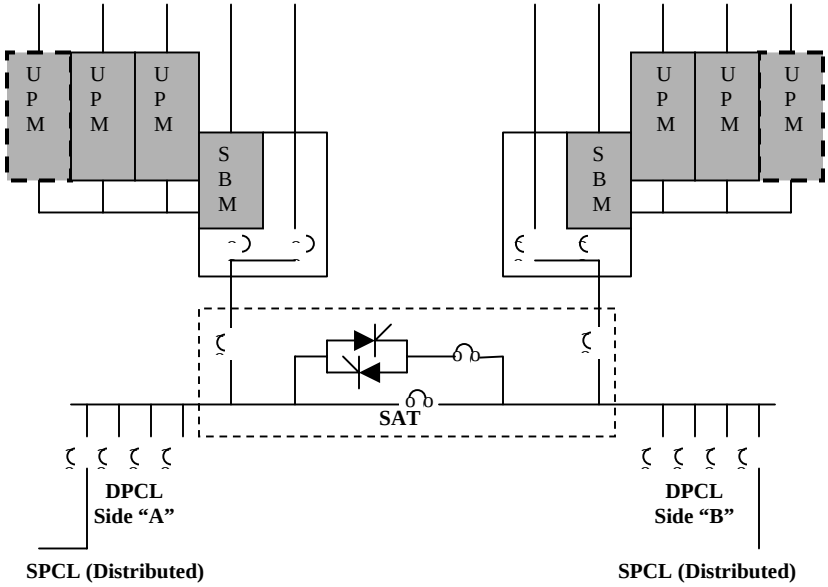

However, the SPCL can now be attached to either power distribution system at any point and benefit from the high MTBF available. IF there were a massive failure of one UPS the SAT would move that distribution bus to the other UPS and the dual-path nature of the distribution systems would continue. The distribution system would now be the series combination of the auto tie with the redundant UPS in parallel with the redundant UPS. By the methods used in Mil-Std-HDBK-217, that combination will yield a MTBF for the system of 1.123 x 10^{16} Hrs. For the SPCLs that is nearly 12 orders of magnitude higher than with the STS configurations.